Montpellier

LAUNDRY - DISHWASHING - COOKING - COOLING

CHC612MSS

Chimney Hood

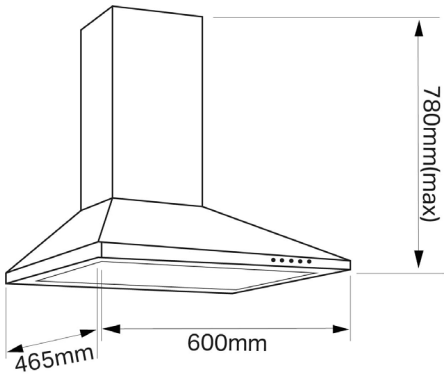

3X SPEED

ALUMINIUM FILTER

2 YEAR GUARANTEE PARTS & LABOUR ACROSS ALL OUR MODELS

Specification

3 Speed Motor
2 x 2w LED Lamps
Push Button Controls

2x Aluminium Filters & 1 Charcoal Filter Inc.
Ducting Kit Inc.
Re-Circulated or Vented

Controls	Push Button
Noise Level	63dB (max)
Motor Power	65W
Max Air Flow	350m³/h
Energy Consumption	-
Features	-
Colour	Stainless Steel
Dimensions	H780 W600 D465mm
Gross Weight	7/8.5kg
Guarantee	2 Year Parts and Labour Guarantee

www.montpellier-appliances.com
T: 03333 234 473 **E:** customerservices@montpellier-appliances.com
Montpellier Domestic Appliances Ltd, Untit 1, Tewkesbury Retail Park,
Tewksbury, Gloucestershire GL20 8JU

© Copyright Montpellier Domestic Appliances Ltd. 2017, all rights reserved. E&OE.