Montpellier

LAUNDRY - DISHWASHING - COOKING - COOLING

MITL320

Integrated Tall Larder Fridge

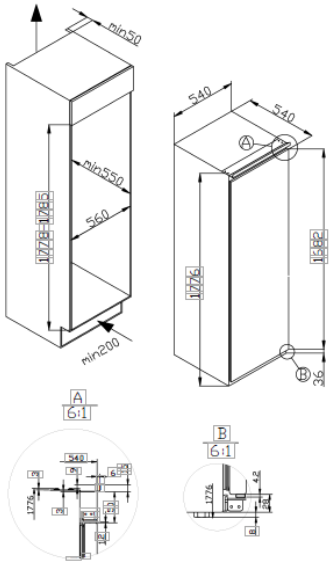

A+

5 YEAR GUARANTEE
PARTS & LABOUR
ON SELECTED PRODUCTS

Specification

5+2 Glass Shelves
Silver Trims to Shelves & Door Furniture
Full Electronic Controls

Foldable Wine Rack
2 Salad Crisper's
Full Metal Back

Capacity (Gross/Net)	320 / 316Ltr
Energy	A+
Noise Level	41 dB
Climate Class	N/T (+16°C +43°C)
Energy Consumption	147 kWh (annual)
Features	Slider Fixings, Automatic Defrosting, Reversible Door, Bottle Shelf, LED Lighting, Turbo Fan Air Cooling
Weight (Gross/Net)	57/52kg
Dimensions	H1776 W540 D540mm
Guarantee	5 Year Parts and Labour Guarantee

www.montpellier-appliances.com
T: 03333 234 473 **E:** customerservices@montpellier-appliances.com
Montpellier Domestic Appliances Ltd, Unit 1, Tewkesbury Retail Park,
Tewkesbury, Gloucestershire GL20 8JU

© Copyright Montpellier Domestic Appliances Ltd. 2017, all rights reserved. E&OE.