Montpellier

THE PERFECT BALANCE OF FUNCTION AND STYLE

LAUNDRY - DISHWASHING - COOKING - COOLING

Installation and Operating Instructions

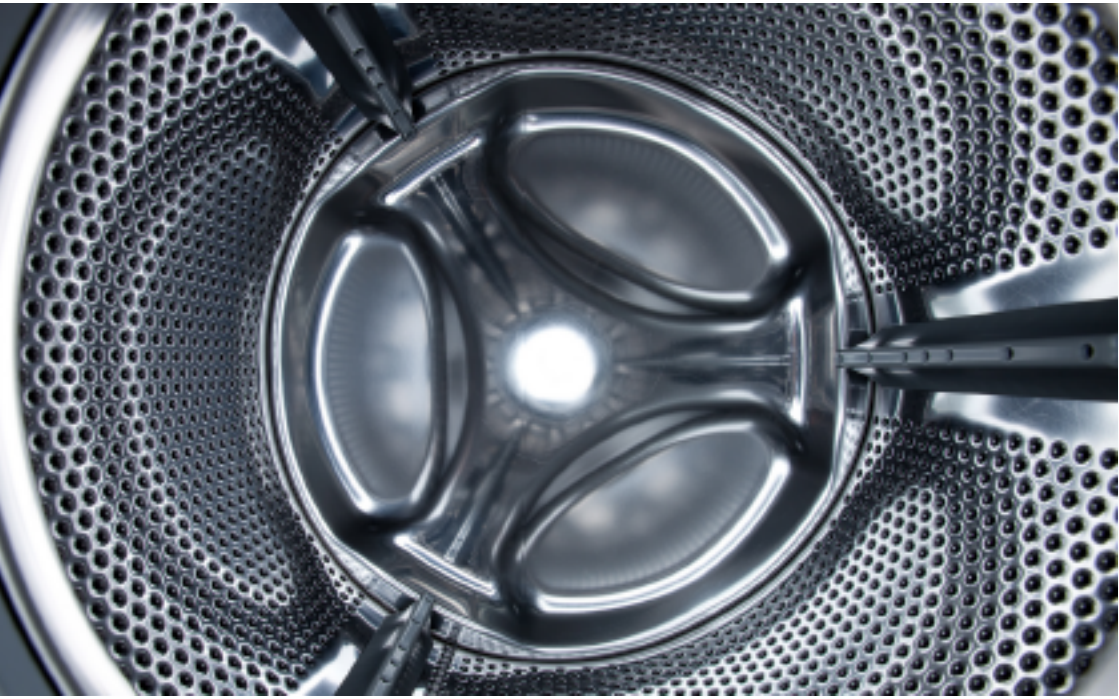

Freestanding Washing Machine

MWM71400W

Please read these instructions carefully before attempting to install or use this appliance.
We recommend that you keep these instructions in a safe place for future reference.

Welcome

Thank you for choosing this Montpellier appliance.

Our appliances have been designed to provide you with the best combination of style, reliability and performance to give you years of trouble-free use.

You may be familiar with a similar product, but please take time to read these instructions carefully before installing or using your appliance to ensure you get the most from your purchase.

We recommend that you keep this manual in a safe place for future reference.

Your appliance is covered by a comprehensive two year Parts & Labour Guarantee. In the unlikely event that you experience a problem with your appliance, you can rest assured that you are fully protected against the cost of repairs for the first 24 months . Please note that any claim must be accompanied by the model reference number, serial number and proof of purchase.

To activate your guarantee, you will need your product serial number. This can be found inside your appliance.

NB: Please make sure that you keep a copy of your original sales invoice as this will be needed if any service call is required.

There are three ways to register your Guarantee:

- **Online:** Visit the Support page on our website and complete the online Product Registration form. **www.montpellier-appliances.com**
- **By Post:** Simply detach and fill in the form provided, attach a stamp and send it in the post. Don't forget to include your e-mail address so that we can send confirmation through to you.
- **By Phone:** Contact our warranty registration department on **0808 1961388**

Thank you for choosing this product.
This User Manual contains important safety information and instructions on the operation and maintenance of your appliance.
Please take the time to read this User Manual before using your appliance and keep this book for future reference.
The design and specifications are subject to change without prior notice for product improvement.

Icon	Type	Meaning
	WARNING	Serious injury or death risk
	RISK OF ELECTRIC SHOCK	Dangerous voltage risk
	FIRE	Warning; Risk of fire / flammable materials
	CAUTION	Injury or property damage risk
	IMPORTANT / NOTE	Operating the system correctly

CONTENTS

1.SAFETY INSTRUCTIONS 1
1.1 General Safety Warnings 2
1.2 During Use 6
1.3 Packaging and Environment 7
1.4 Savings Information 7
2.TECHNICAL SPECIFICATIONS 8
2.1 General Appearance 8
2.2 Technical Specifications 8
3.INSTALLATION 9
3.1 Removing the Transit Bolts 9
3.2 Adjusting the Feet / Adjusting Adjustable Stays 9
3.3 Electrical Connection 10
3.4 Water Inlet Hose Connection 10
3.5 Water Discharge Connection 11
4.CONTROL PANEL OVERVIEW 11
4.1 Detergent Drawer 12
4.2 Sections 12
4.3 Program Dial 13
4.4 Electronic Display 13
5.USING YOUR WASHING MACHINE 14
5.1 Preparing Your Laundry 14
5.2 Putting Laundry in the Machine 14
5.3 Adding Detergent to the Machine 15
5.4 Operating Your Machine 15
5.5 Selecting a Programme 15
5.6 Half-Load Detection System 16
5.7 Additional Functions 16
5.8 Child Lock 17
5.9 Cancelling the Programme 17
5.10 Programme End 17
6. PROGRAMME TABLE 18
6.1 Important Information 20
7. CLEANING AND MAINTENANCE 21
7.1 Warning 21
7.2 Water Inlet Filters 21
7.3 Pump Filter 22
7.4 Detergent Drawer 22
8. FLUSH STOPPER / BODY / DRUM 23
9.TROUBLESHOOTING 24
10.AUTOMATIC FAULT WARNINGS AND WHAT TO DO 25
11.ENERGY LABEL/PIS 26
12. HERE FOR YOU 28

1. SAFETY INSTRUCTIONS

Operating voltage / frequency	(V/Hz) (220-240) V~/50Hz
Total current (A)	10
Water pressure (Mpa)	Maximum 1 Mpa / Minimum 0. 1Mpa
Total power (W)	2100
Maximum washing capacity (dry laundry) (kg)	7.0

- Do not install your machine on a carpet or any surface that would prevent the ventilation of its base.
- The appliance is not intended for use by people (including children) with reduced physical, sensory or mental capabilities, or lack of experience and knowledge unless they have been given supervision or instruction concerning use of the appliance by a person responsible for their safety.
- Children of less than 3 years should be kept away unless continuously supervised.
- Call the nearest authorized service centre if you find any damage to the power supply cable.
- Use only the new water inlet hose coming with your machine when making water inlet connections to your machine. Never use old, used or damaged water inlet hoses.
- Children should not play with the appliance.
- Cleaning and user maintenance should not be made by children without supervision.

Read this user manual carefully.

Your machine is for domestic use only. Using it for commercial purposes will cause your warranty to be cancelled.

1.1 General Safety Warnings

- The necessary ambient temperature for operation of your Washing Machine is 15-25 °C.
- Where the temperature is below 0 °C, hoses may split or the electronic card may not operate correctly.
- Please ensure that garments loaded into your Washing Machine are free from foreign objects such as nails, needles, lighters and coins.
- It is recommended that for your first wash, you select the 90˚ Cotton programme without laundry and half fill compartment II of the detergent drawer with a suitable detergent.
- Residue may build up on detergent and softeners exposed to air for a long period of time. Only put softener or detergent in the drawer at the beginning of each wash.
- Unplug your Washing Machine and switch off the water supply if the Washing Machine is left unused for a long time. We also recommend that you leave the door open to prevent build up of humidity inside the Washing Machine.
- Some water may be left in your Washing Machine as a result of quality checks during production. This will not affect the operation of your Washing Machine.

- The packaging of the machine could be hazardous to children. Do not allow children to play with the packaging or small parts from the Washing Machine.
- Keep the packaging materials in a place where children cannot reach them, or dispose of them appropriately.
- Use pre-wash programs only for very dirty laundry.

⚠ Never open the detergent drawer while the machine is running.

- In the event of a breakdown, unplug the machine from the mains supply and turn the water supply off. Do not attempt to carry out any repairs. Always contact an authorised service agent.
- Do not exceed the maximum load for the washing programme you have chosen.

⚠ Never force the door open when your Washing Machine is running.

- Washing laundry containing flour may damage your machine.
- Please follow the manufacturers' instructions regarding the use of fabric conditioner or any similar products that you intend to use in your Washing Machine.
- Make sure that the door of your Washing Machine is not restricted and can be opened fully.
- Install your machine in a location that can be fully ventilated and preferably has constant air circulation.

⚠ Read these warnings. Follow the advice given to protect yourself and others from risks and fatal injuries.

⚠ RISK OF BURNS

Do not touch the drain hose or any discharged water while your Washing Machine is running. The high temperatures involved pose a burn risk.

⚠⚠ RISK OF DEATH FROM ELECTRICAL CURRENT

- Do not connect your Washing Machine to the mains electricity supply using an extension lead.
- Do not insert a damaged plug into a socket.
- Never remove the plug from the socket by pulling the cord. Always hold the plug.
- Never touch the power cord/plug with wet hands as this could cause a short circuit or electric shock.
- Do not touch your Washing Machine if your hands or feet are wet.
- A damaged power cord/plug can cause fire or give you an electric shock. When damaged it must be replaced, this should only be done by qualified personnel.

⚠ Risk of flooding(when placing the drain hose in a sink)

- Check the speed of water flow before placing the drain hose in a sink.
- Take necessary measures to prevent the hose from slipping.
- Water flow may dislodge the hose if it is not properly secured. Make sure the plug in your sink does not block the plug hole.

⚠ Danger of Fire

- Do not store inflammable liquids near your machine.
- The sulphur content of paint removers may cause corrosion. Never use paint removing materials in your machine.
- Never use products that contain solvents in your machine.
- Please ensure that garments loaded into your Washing Machine are free from foreign objects such as nails, needles, lighters and coins.

⚠ Risk of falling and injury

- Do not climb on your Washing Machine.
- Make sure hoses and cables do not cause a trip hazard.
- Do not turn your Washing Machine upside down or on its side.
- Do not lift your Washing Machine using the door or detergent drawer.

⚠ The machine must be carried by at least 2 people.

⚠ Child safety

- Do not leave children unattended near the machine. Children might lock themselves in the machine resulting in risk of death.
- Do not allow children to touch the glass door during operation. The surface becomes extremely hot and may cause damage to skin.
- Keep packaging material away from children.
- Poisoning and irritation may occur if detergent and cleaning materials are consumed or come into contact with the skin and eyes. Keep cleaning materials out of the reach of children.

1.2 During Use

- Keep pets away from your machine.
- Please check the packaging of your machine before installation and the outer surface of the machine once the packaging has been removed. Do not operate the machine if it appears damaged or if the packaging has been opened.
- Your machine must only be installed by an authorised service agent. Installation by anyone other than an authorised agent may cause your warranty to be void.
- This appliance can be used by children aged 8 years and above and persons with reduced physical, sensory or mental capabilities or lack of experience and knowledge if they have been given supervision or instruction concerning use of the appliance in a safe way and understand the hazards involved. Children shall not play with the appliance. Cleaning and user maintenance shall not be done by children without supervision.
- Only use your machine for laundry that is labelled as suitable for machine washing by the manufacturer.
- **Before operating the washing machine, remove the 4 transit bolts and rubber spacers from the rear of the machine.** If the bolts are not removed they may cause heavy vibration, noise and malfunction of the machine and cause the guarantee to be void.
- Your warranty does not cover damage caused by external factors such as fire, flooding and other sources of damage.
- Please do not throw away this user manual; keep it for future reference and pass it onto the next owner.

NOTE: Specifications for the machine may vary depending on the product purchased.

1.3 Packaging and Environment

Removal of packaging materials

Packaging materials protect your machine from any damage that might occur during transportation. The packaging materials are environmentally friendly as they are recyclable. Use of recycled material reduces raw material consumption and decreases waste production.

1.4 Savings Information

Some important information to get the most efficient use out of your machine:

- Do not exceed the maximum load for the washing programme you have chosen. This will allow your machine to run in energy saving mode.
- Do not use the pre-wash feature for lightly soiled laundry. This will help you save on the amount of electricity and water consumed.

CE Declaration of conformity

We declare that our products meet the applicable European Directives, Decisions and Regulations and the requirements listed in the standards referenced.

Disposal of your old machine

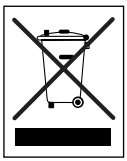

The symbol on the product or on its packaging indicates that this product may not be treated as household waste. Instead it shall be handed over to the applicable collection point for the recycling of electrical and electronic equipment. By ensuring this product is disposed of correctly, you will help prevent potential negative consequences for the environment and human health, which could otherwise be caused by inappropriate waste handling of this product. For more detailed information about recycling of this product, please contact your local city office, your household waste disposal service or the shop where you purchased the product.

2. TECHNICAL SPECIFICATIONS

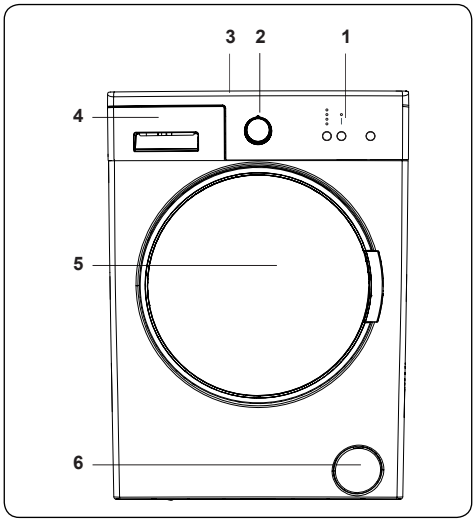

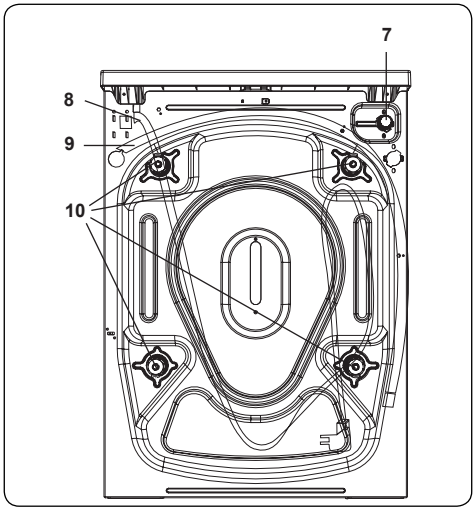

2.1 General Appearance

1. Display
2. Programme Dial
3. Top Panel
4. Detergent Drawer
5. Door/Drum
6. Pump Filter Cover
7. Water Inlet Valve
8. Power Cable
9. Discharging Hose
10. Transit Bolts

2.2 Technical Specifications

Operating voltage / frequency (V/Hz)	(220-240) V~/50Hz
Total current (A)	10
Water pressure (Mpa)	Maximum: 1 Mpa Minimum : 0. 1 Mpa
Total power (W)	2100
Maximum dry laundry capacity (kg)	7.0
Spinning revolution (rev / min)	1400
Programme number	15
Dimensions (mm) Height Width Depth	 845 597 497

3. INSTALLATION

3.1 Removing the Transit Bolts

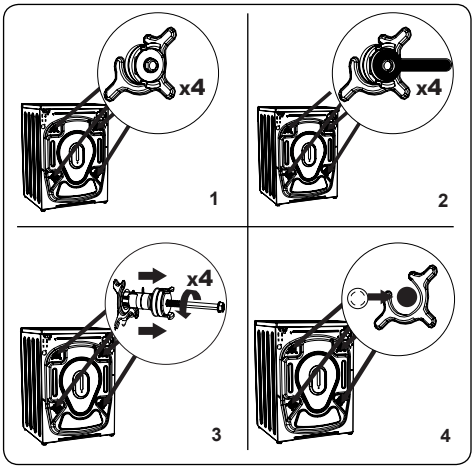

1. Before operating the washing machine, remove the 4 transit bolts and rubber spacers from the rear of the machine. If the bolts are not removed, they may cause heavy vibration, noise and malfunction of the machine and void the warranty.
2. Loosen the transit bolts by turning them anticlockwise with an appropriate spanner.
3. Remove the transit bolts with a straight pull.
4. Fit the plastic blanking caps supplied in the accessories bag into the gaps left by the removal of the transit bolts. The transit bolts should be stored for future use.

NOTE: Remove the transit bolts before using the machine for the first time. Faults occurring due to the machine being operated with transit bolts fitted are out of the scope of the warranty.

3.2 Adjusting the Feet

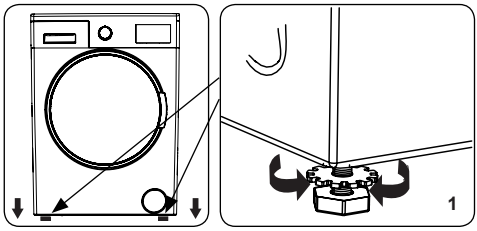

1. Do not install your machine on a surface (such as carpet) that would prevent ventilation at the base.

- To ensure silent and vibration-free operation of your machine, install it on a firm surface.
- You can level your machine using the adjustable feet.
- Loosen the plastic locking nut.

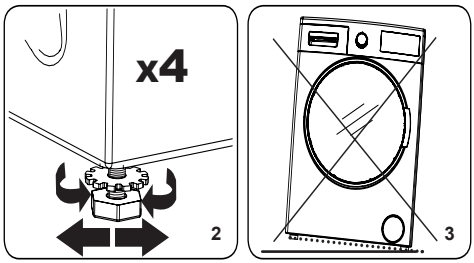

2. To increase the height of the machine, turn the feet clockwise. To decrease the height of the machine, turn the feet anticlockwise.

- Once the machine is level, tighten the locking nuts by turning them clockwise.

3. Never insert cardboard, wood or other similar materials under the machine to level it.

- When cleaning the ground on which the machine is located, take care not to disturb the level of the machine.

3.3 Electrical Connection

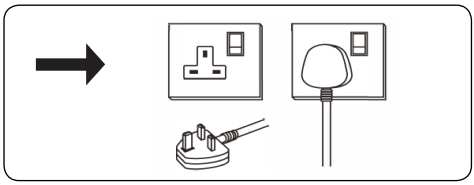

- Your Washing Machine requires a 220-240V, 50Hz mains supply.
- The mains cord of your washing machine is equipped with a 13A UK 3-pin earthed plug. This plug should always be inserted into an earthed 13A socket outlet.
- If you do not have a suitable socket and fuse conforming with this, please ensure the work is carried out by a qualified electrician.
- We do not take responsibility for damage that occurs due to the use of ungrounded equipment.

NOTE: Operating your machine with low voltage will cause the life cycle of your machine to be reduced and its performance to be restricted.

3.4 Water Inlet Hose Connection

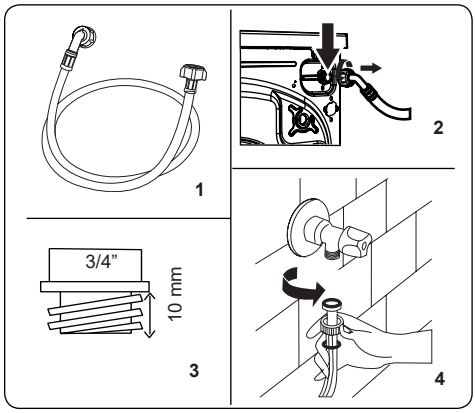

- Your machine will have a single water inlet connection (cold **(1)**). The white capped hose should be connected to cold water inlet on the rear of the washing machine using the angled end **(2).**
- Your tap must have a 3/4" thread to be able to connect the cold hose **(3).**
- Connect the new water inlet hose to your cold supply **(4)** using the straight end.
- Hand tighten the connections. If in any doubt, consult a qualified plumber.
- Water flow with pressure of 0.1-1 Mpa will allow your machine to operate at optimum efficiency (pressure of 0.1 Mpa means that more than 8 litres of water per minute will flow through a fully opened tap).
- Once you have made all of the connections, carefully turn the water supply on and check for leaks.
- Ensure that the new water inlet hoses are not trapped, kinked, twisted, folded or crushed.

NOTE: Your Washing Machine must only be connected to your water supply using the supplied new fill hose. Old hoses must not be reused.

3.5 Water Discharge Connection

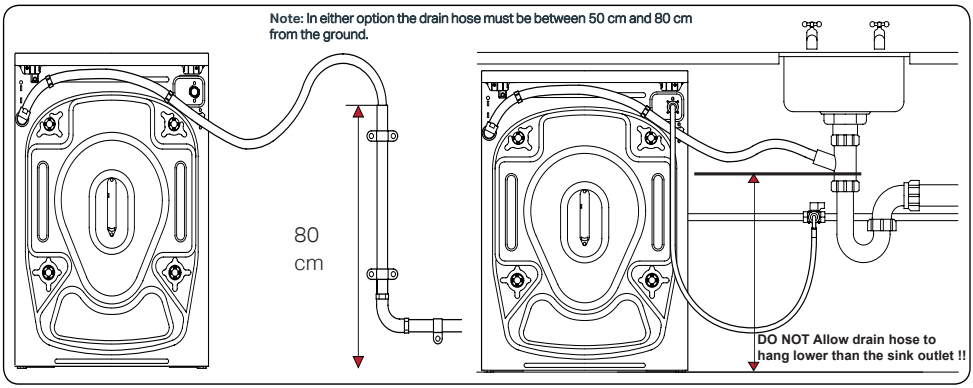

- Connect the water drain hose to a standpipe or to the outlet elbow of a household sink, using additional equipment.
- If connecting to a sink outlet the drain hose must never hang lower than the sink outlet otherwise waste water from the sink is likely to syphon in to the washing machine - see above.
- Never attempt to extend the water drain hose.
- Do not put the water drain hose from your machine into a container, bucket or bathtub.
- Make sure that the water drain hose is not bent, buckled, crushed or extended.
- The water drain hose must be installed at a maximum height of 100 cm from the ground.

4. CONTROL PANEL OVERVIEW

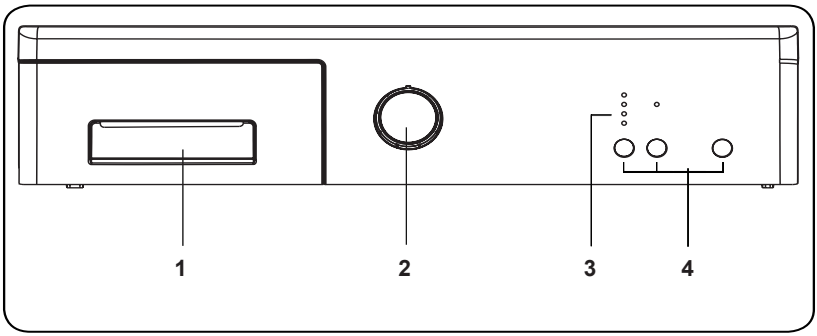

1. Detergent Drawer
2. Programme Dial
3. Function LEDs
4. Start/Pause and Function Buttons

4.1 Detergent Drawer

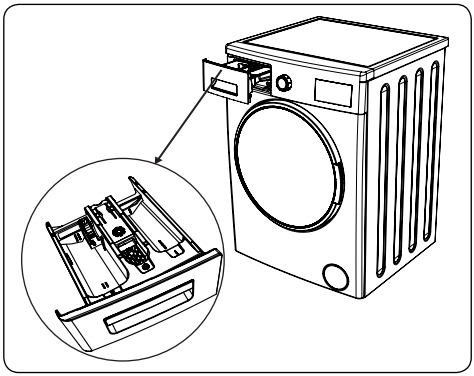

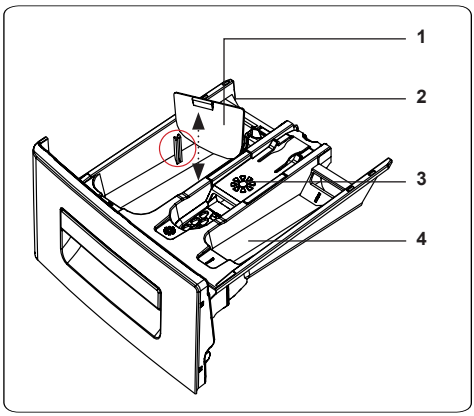

1. Liquid Detergent Attachments **(*)**
2. Main Wash Detergent Compartment
3. Softener Compartment
4. Pre-Wash Detergent Compartment

4.2 Sections

Main wash detergent compartment:

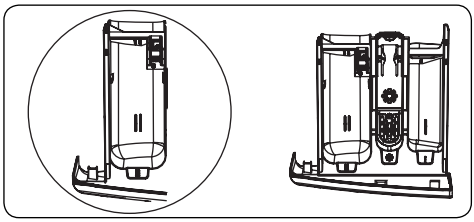

This compartment is for liquid or powder detergents or limescale remover. The fluid detergent level plate will be supplied inside your machine. **(*)**

Fabric conditioner, starch, detergent compartment:

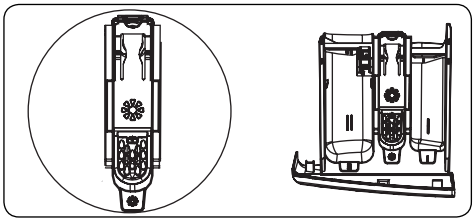

This compartment is for softeners, conditioners or starch. Follow the instructions on the packaging. If softeners leave residue after use, try diluting them or using a liquid softener.

Pre-wash detergent compartment:

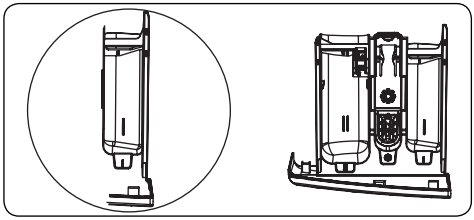

This compartment should be used only when the pre-wash feature is selected. We recommend that the pre-wash feature is used only for very dirty laundry.

4.3 Program Dial

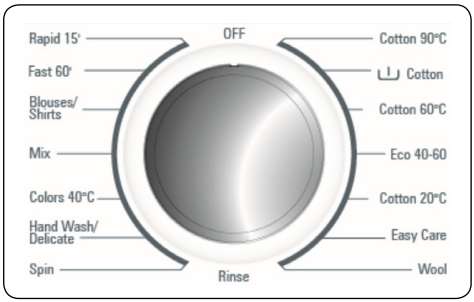

- To select the desired programme, turn the programme dial either clockwise or anti-clockwise until the marker on the programme dial points to the chosen programme.
- Make sure that the programme dial is set exactly to the programme you want.

4.4 Display

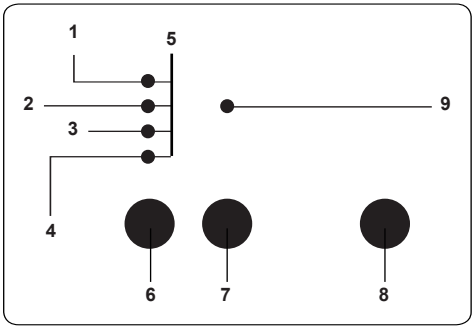

1. Washing LED
2. Rinsing LED
3. Spinning LED
4. End LED
5. Temperature Indicator LED
6. Temperature Adjustment Button
7. Rapid Wash Button
8. Start/Pause Button
9. Rapid Wash LED

The function LEDs **(1-5)** serve a dual purpose as they both indicate the wash state of the cycle chosen **(1-4)** as well as showing the temperature selected for the required wash cycle **(5).**

Firstly, when selecting a cycle and then using the Temperature Adjustment Button **(6)** if required the LEDs **(5)** will indicate the required or default temperature of the chosen cycle - refer to page 16

Secondly, once you press the Start button the LED's become a Cycle Indicator showing the wash stage of the selected cycle - Wash/Rinse/Spin/End

The display panel shows “End” when the selected programme is complete. The display panel also indicates if a fault has occurred with your machine (see chapter 10 for Fault Codes)

5. USING YOUR WASHING MACHINE

5.1 Preparing Your Laundry

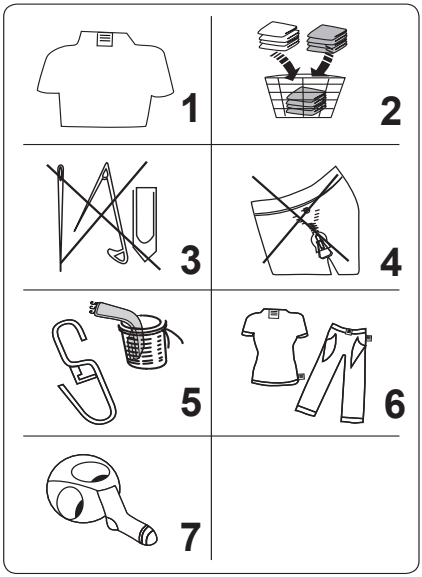

(1) Follow the instructions given on the care labels on your clothing**.**
Separate your laundry according to type (cotton, synthetic, sensitive, wool etc.), washing temperature (cold, 30°, 40°, 60°, 90°) and the degree of dirtiness (slightly stained, stained, highly stained).

(2) Never wash coloured and white laundry together. Dark textiles may contain excess dye and should be washed separately several times.

(3) Ensure that there are no metallic materials on your laundry or in the pockets; if so, remove them**.**

⚠ **CAUTION:** Any malfunctions which occur due to foreign materials damaging your machine are not covered by the warranty.

(4) Close zips and fasten any hooks and eyes

(5) Remove the metallic or plastic hooks of curtains or place them in a washing net or bag.

(6) Reverse textiles such as pants, knitwear, t-shirts and sweat shirts.

(7) Wash socks, handkerchiefs and other small items in a washing net.

Can be bleached	Do not bleach	Normal washing
Maximum ironing temperature 150°C	Maximum ironing temperature 200°C	Do not iron
Can be dry cleaned	No dry cleaning	Dry flat
Drip dry	Hang to dry	Do not tumble dry
(F) Dry cleaning in gas oil, pure alcohol and R113 is allowed	(P) Perchloroethylene R11, R13, Petroleum	(A) Perchlorinetyhlene R11, R113, Gas oil

5.2 Putting Laundry in the Machine

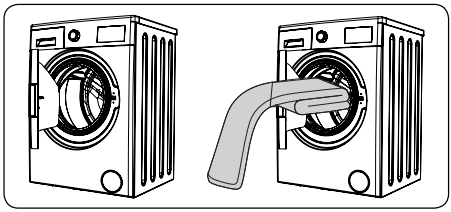

- Open the door of your machine.
- Spread your laundry evenly in the machine

NOTE: Take care not to exceed the maximum load of the drum as this will give poor wash results and cause creasing. Refer to the washing programme tables for information on load capacities.

The following table shows approximate weights of typical laundry items:

LAUNDRY TYPE	WEIGHT (gr)
Towel	200
Linen	500
Bathrobe	1200
Quilt cover	700
Pillow slip	200
Underwear	100
Tablecloth	250

- Load each item of laundry separately.
- Check that no items of laundry are trapped between the rubber seal and the door.
- Gently push the door until it clicks shut.

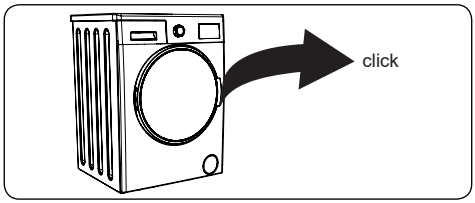

- Make sure the door is fully closed, otherwise the programme will not start.

5.3 Adding Detergent to the Machine

The amount of detergent you will need to put in your machine will depend on the following criteria:

- If your clothes are only slightly soiled, do not pre-wash. Put a small amount of detergent (as specified by the manufacturer) into compartment **II** of the detergent drawer.
- If your clothes are excessively soiled, select a programme with pre-wash and put ¼ of the detergent to be used into compartment **I** of the detergent drawer and the rest in compartment **II**.
- Use detergents produced for automatic washing machines. Follow the manufacturer's instructions on the amount of detergent to use.
- In areas of hard water, more detergent will be required.
- The amount of the detergent required will increase with higher washing loads.
- Put softener in the middle compartment of the detergent drawer. Do not exceed the MAX level.
- Thick softeners may cause clogging of the drawer and should be diluted.
- It is possible to use fluid detergents in all programmes without a pre-wash. To do this, slide the fluid detergent level plate **(*)** into the guides in compartment II of the detergent drawer. Use the lines on the plate as a guide to fill the drawer to the required level.

5.4 Operating Your Machine

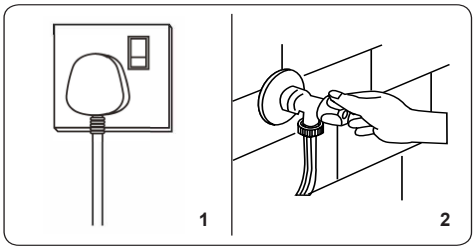

- Plug your machine in to the mains supply.
- Turn on the water supply.Open the machine door.
- Evenly spread your laundry in the machine.
- Gently push the door until it clicks shut.

5.5 Selecting a Programme

Use the programme tables to select the most appropriate programme for your laundry.

5.6 Half-Load Detection System

Your machine features a half-load detection system.

If you put less than half the maximum load of laundry into your machine it will automatically set the half-load function, regardless of the programme you selected. This means that the selected programme will take less time to complete and will use less water and energy.

5.7 Additional Functions

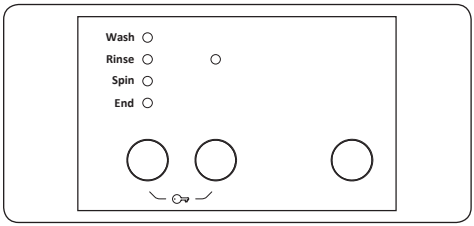

Before starting a programme, you can select an additional function.

- Press the button on the Control Panel below the symbol of the additional function you wish to select.
- If the symbol of the additional function flashes continuously, the function has been activated.
- If the symbol of the additional function blinks, the function has not been selected.

Reason for non-activation:

- The additional function is not compatible with the selected washing programme.
- Your machine has progressed too far into the selected programme for the additional function to be possible.
- The additional function you have chosen is not compatible with another additional function you have already selected.

1. Temperature Selection

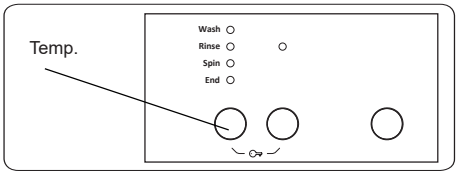

Use the washing water temperature adjustment button to alter the automatically programmed washing water temperature.

When you select a programme, the maximum temperature for that programme is automatically selected. To adjust the temperature, press the temperature adjustment button until the desired temperature is displayed on the digital display.

You can gradually reduce the water temperature between the maximum temperature for the selected programme and cold wash ✳. If you have skipped the washing water temperature you wanted, keep pressing the temperature adjustment button until the desired temperature is displayed again.

NOTE: 90°C is not displayed in the Wash Temperature Indicators section of the display panel. When the temperature value is decreased to 60°, 40°, 30°, ✳ (cold washing) temperature levels by pressing the temperature adjustment button, the decreased temperature value is displayed on the display panel.

2. Rapid Wash

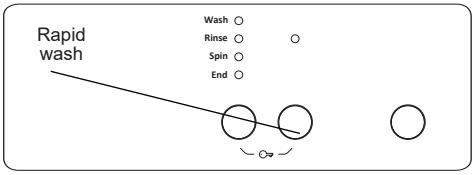

You can wash your laundry in a shorter time, using less energy and water by selecting this additional function. We recommend that you only use this option if you are washing less than half the maximum dry load for the selected programme.

To select this function, press the Rapid wash button then the symbol is displayed.

3. Start/Pause Button

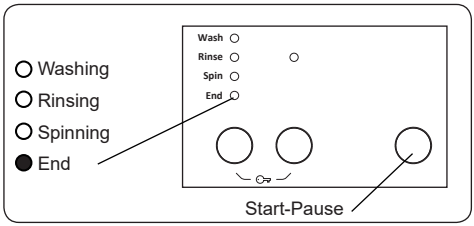

To start the selected programme, press the Start/Pause button.

If you switch your machine to standby mode, the End indicator on the electronic display will blink.

5.8 Child Lock

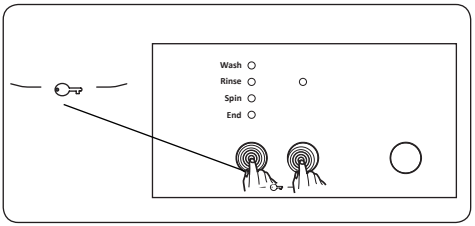

The child lock function prevents the machine being operated unintentionally or by unsupervised children.

To activate the child lock, press and hold additional functions 1 and 2 buttons simultaneously for at least 3 seconds. The Additional Function LEDs will be lit on the control panel when the child lock is activated.

If any button is pressed while the child lock is active, the Additional Function LEDs on the control panel will blink.

If the child lock is engaged and any programme is running, when the programme dial is turned to the CANCEL position and another programme selected, the previously selected programme continues from where it was left.

To deactivate the child lock, press and hold additional functions 1 and 2 buttons simultaneously for at least 3 seconds. The Additional Function LEDs will will blink on the display.

5.9 Cancelling the Programme

To cancel a running programme at any time:

- Turn the programme dial to the “STOP” position.
- Your machine will stop the washing operation and the programme will be cancelled.
- Turn the programme dial to any other programme to drain the machine.
- Your machine will perform the necessary discharge operation and cancel the programme
- You can now select and run a new programme.

5.10 Programme End

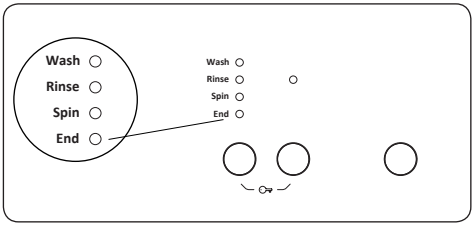

Your machine will stop by itself as soon as the selected programme finishes.

- “END” will flash on the display panel
- You can open the machine’s door and remove the laundry once the door lock has released.
- Leave the door of your machine open to allow the inner part of your machine to dry.
- Turn the programme dial to the “STOP” position.
- Unplug your machine.
- Turn the water tap off.

6. PROGRAMME TABLE

Programme	Washing temperature (°C)	Maximum dry laundry amount (kg)	Detergent compartment	Programme duration (Min.)	Laundry type / Descriptions
COTTON 90°C	90°	7.0	2	179	Very dirty, cotton and flax textiles. (Underwear, linen, tablecloth, towel (maximum 3.5 kg), bedclothes, etc.)
Cotton Pre-Wash	60°	7.0	1&2	164	Dirty cotton and flax textiles. (Underwear, linen, tablecloth, towel (maximum 3.5 kg), bedclothes, etc.)
COTTON 60°C	60°	7.0	2	230	Dirty cotton and flax textiles. (Underwear, linen, tablecloth, towel (maximum 3.5 kg), bedclothes, etc.)
ECO 40-60	40°	7.0	2	208	Dirty cotton and flax textiles. (Underwear, linen, tablecloth, towel (maximum 3.5 kg), bedclothes, etc.)
COTTON 20°C	20°	3.5	2	96	Less dirty, cotton and linen textiles. (Underwear, bedsheet, tablecloth, towel (max. 2 kg) bedcloth, etc.)
EASY CARE	40°	3.5	2	110	Very dirty or synthetic-mixed textiles. (Nylon socks, shirts, blouses, synthetic-including trousers etc.)
WOOL	30°	2.5	2	39	Woollen laundries with machine wash labels.
RINSING	-	7.0	-	36	Provides an additional rinse to any type of laundry after the washing cycle.
SPINNING	-	7.0	-	15	Provides an additional spin cycle to any type of laundry after the washing cycle.
Hand Wash/ Delicate	30°	2.5	2	90	Laundry recommended for hand wash or sensitive laundry.
COLOURS 40°C	40°	7.0	2	225	Less dirty, cotton and linen textiles. (Underwear, bedsheet, tablecloth, towel (max. 3 kg) bedcloth, etc.)
MIXED	30°	3.5	2	81	Dirty cotton, synthetics, colour and flax textiles can be washed together.
BLOUSES / SHIRTS	60°	3.5	2	107	Dirty cotton, synthetic and synthetic-mixed shirts and blouses can be washed together.
Fast 60 min.	60°	3.0	2	60	Dirty, cotton, coloured and linen textiles washed at 60°C in 60 minutes.
(*) RAPID 15 min.	30°	2.0	2	15	Lightly soiled, cotton, colored and linen textiles.

NOTE: PROGRAMME DURATION MAY CHANGE ACCORDING TO THE AMOUNT OF LAUNDRY, TAP WATER TEMPERATURE, AMBIENT TEMPERATURE AND SELECTED ADDITIONAL FUNCTIONS.

(*) Due to the short washing time of this programme, we recommend that less detergent is used. The programme may last longer than 15 minutes if your machine detects an uneven load. You can open the door of your machine 2 minutes after the completion of a washing operation. (The 2 minute period is not included in the programme duration).

According to regulation 1015/2010 and 1061/2010, the programme 3 and the programme 4 are respectively the 'Standard 60°C cotton programme' and the 'Standard 40°C cotton programme'.

The Eco 40-60 programme is able to clean normally soiled cotton laundry declared to be washable at 40°C or 60°C, together in the same cycle, and that this programme is used to assess the compiance with the EU ecodesign legislation.

- The most efficient programmes in terms of energy consumption are generally those that perform at lower temperatures and longer duration.
- Loading the household washing machine up to the capacity indicated by the manufacturer for the respective programmes will contribute to energy and water savings.
- Program duration, energy consumption and water consumption values may vary according to wash load weight and type, selected extra functions, tap water temperature and ambient temperature.
- It's recommended to use liquid detergent for the washing programmes at low temperature. The amount of detergent to be used may vary depending on the amount of laundry and the level of dirtiness of the laundry. Please follow the detergent manufacturers' recommendations for the amount of the detergent to be used.
- The noise and remaining moisture content are influenced by the spinning speed. The higher spinning speed in the spinning phase, the higher noise and the lower remaining moisture content.
- You can access the product database where the model information is stored by reading the QR code on the energy label.

Programme Name	Rated Capacity kg	Energy Consumption kWh/cycle			Programme Duration Hours:Minutes			Water Consumption Litres/Cycle			max. Temperature °C			Remaining Moisture Content % 1400 Rpm		
		Rated Capacity	1/2 Load	1/4 Load	Rated Capacity	1/2 Load	1/4 Load	Rated Capacity	1/2 Load	1/4 Load	Rated Capacity	1/2 Load	1/4 Load	Rated Capacity	1/2 Load	1/4 Load
COTTON 90°C	7	2.22			02:59			76			81			53%		
COTTON 60°C	7	1,19			03:50			52			43			53%		
ECO 40-60	7	1,16	0,40	0,30	03:28	02:40	02:40	38	30	25	50	27	23	53%	53%	53%
EASY CARE	3,5	0.49			01.50			44			42			53%		
FAST 60'.	3	0,99			01.00			31			58			53%		
COTTON 20°C	3,5	0,2			01.36			43			20			53%		

6.1 Important Information

- Use detergents, softeners and other additives suitable for automatic washing machines only. Excessive foam has occurred and automatic foam absorption system has been activated due to too much detergent usage.
- We recommend that periodic cleaning for washing machine every 2 months. For periodic cleaning please use Drum Clean programme. If your machine do not have Drum Clean programme, use Cottons-90 programme. When required, use limescale removers manufactured specifically for washing machines only.
- Never force the door open when your Washing Machine is running. You can open the door of your machine 2 minutes after the completion of a washing operation. *
- Never force the door open when your Washing Machine is running. The door will open immediately after the washing cycle has ended. *
- The installation and repairing procedures should always carried out by the Authorised Service Agent in order to avoid possible risks. The manufacturer shall not be held liable for damages that may arise from procedures carried out by unauthorised persons.

(*) Specifications may vary depending on the machine purchased.

7. CLEANING AND MAINTENANCE

7.1 Warning

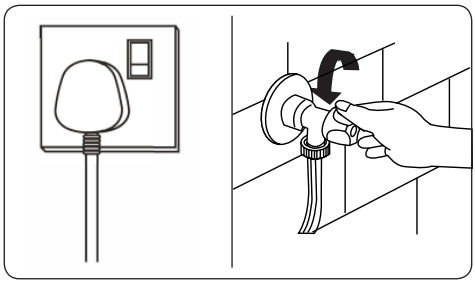

Turn your mains power supply off and remove the plug from the socket before carrying out maintenance and cleaning of your machine.

Turn off the water supply before starting maintenance and cleaning of your machine.

⚠**CAUTION:** Do not use solvents, abrasive cleaners, glass cleaners or all-purpose cleaning agents to clean your Washing Machine. They may damage the plastic surfaces and other components with the chemicals they contain.

7.2 Water Inlet Filters

Water inlet filters prevent dirt and foreign materials from entering your machine. We recommend that these filters are cleaned when your machine is unable to receive sufficient water, although your water supply is on and the tap is open. We recommend that you clean your water inlet filters every 2 months.

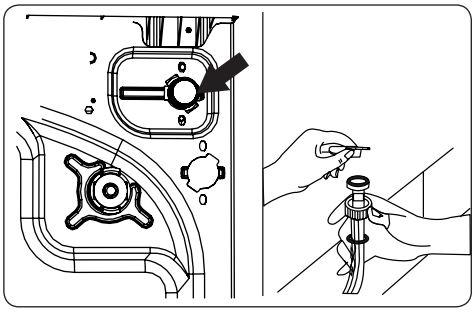

- Unscrew the water inlet hose from the Washing Machine.
- To remove the water inlet filter from the water inlet valve, use a pair of long-nosed pliers to gently pull on the plastic bar in the filter.
- A second water inlet filter is located in the tap end of the water inlet hose. To remove the second water inlet filter, use a pair of long-nosed pliers to gently pull on the plastic bar in the filter.
- Clean the filter thoroughly with a soft brush and wash with soapy water and rinse thoroughly. Re-insert the filter by gently pushing it back into place.

⚠**CAUTION:** The filters at the water inlet valve may become clogged due to water quality or lack of required maintenance and may break down.

This may cause a water leak.

Any such breakdowns are out of the scope of the warranty.

7.3 Pump Filter

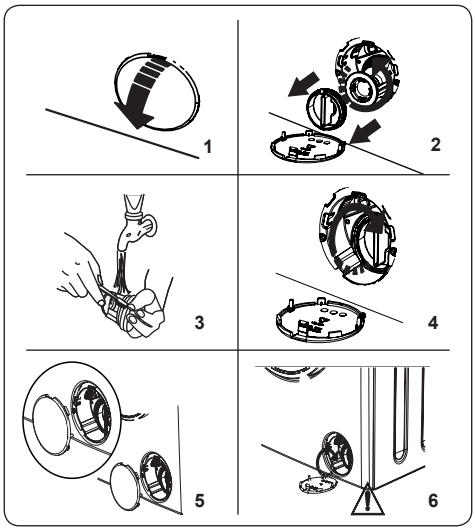

The pump filter system in your Washing Machine prolongs the life of the pump by preventing lint from entering your machine. We recommend that you clean the pump filter every 2 months.

The pump filter is located behind the cover on the front-lower right corner.

Before attempting to clean the filter position a suitable sized container under the pump filter to collect any excess water left in the machine.

To clean the pump filter:

1. Pull the top of the pump filter cover forwards until the pump filter is fully exposed

2. Turn the filter anti-clockwise until loose and slowly remove by pulling forward slowly waiting for the excess water to gradually drain from the washer. Depending on the amount of water inside the machine, you may have to empty the water collection container a few times.

3. Remove any foreign materials from the filter with a soft brush before running under water to clean thoroughly. Carefully check the pump housing for any debris and make sure the pump turns by hand.

4. After cleaning, re-fit the filter by inserting it and turning clockwise.

5. Meet the holes on the front panel side.

6. Close the filter cover.

⚠WARNING: The water in the pump may be hot, wait until it has cooled down before carrying out any cleaning or maintenance.

7.4 Detergent Drawer

The use of detergent may cause residual build up in the detergent drawer over time. We recommend that you remove the drawer every 2 months to clean the accumulated residue.

To remove the detergent drawer:

1. Pull the drawer forwards until it is fully extended.
2. Gently press down on the release catch(as shown below) and pull the drawer from the housing. Clean the drawer thoroughly with warm water and a soft brush. In particular making sure that the Conditioner section and syphon tube are cleaned.
3. Dry thoroughly and slide back in to place making sure the drawer locks in to place

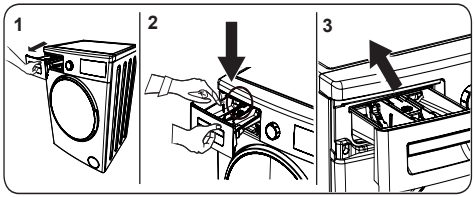

⚠ **Do not wash your detergent drawer in a dishwasher.**

8. FLUSH STOPPER / BODY / DRUM

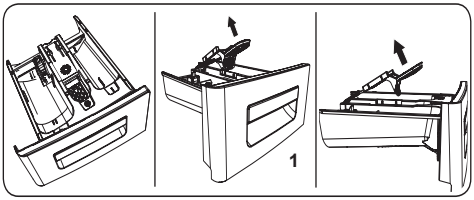

1. Flush stopper

Remove the detergent drawer and disassemble the flush stopper. Clean thoroughly to completely remove any softener residue. Refit the flush stopper after cleaning and check that it is seated properly.

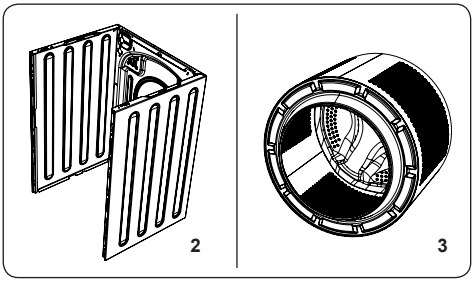

2. Body

Use a mild, non-abrasive cleaning agent, or soap and water, to clean the external casing. Wipe dry with a soft cloth.

3. Drum

Do not leave metallic objects such as needles, paper clips, coins etc. in your machine. These objects lead to the formation of rust stains in the drum. To clean such rust stains, use a non-chlorine cleaning agent and follow the instructions of manufacturer of the cleaning agent. Never use wire wool or similar hard objects for cleaning rust stains.

9. TROUBLESHOOTING

Repair of your machine should be carried out by an authorised service company. If your machine requires repair or if you cannot solve an issue with the information provided below, then you should:

- Unplug your machine from the mains power supply.
- Turn off the water supply.

FAULT	POSSIBLE CAUSE	TROUBLESHOOTING
Your machine does not start.	Machine not plugged in.	Plug machine in.
	Fuses are faulty.	Replace the fuses.
	No mains power supply.	Check mains power.
	Start/Pause button not pressed.	Press the Start/Pause button.
	Programme dial 'stop' position.	Turn the programme dial to the desired position.
	The machine door is not completely closed.	Close the machine door.
Your machine does not intake water.	Water tap is turned off.	Turn tap on.
	Water inlet hose may be twisted.	Check water inlet hose and untwist.
	Water inlet hose clogged.	Clean water inlet hose filters. (*)
	Inlet filter clogged.	Clean the inlet filters. (*)
	The machine door is not completely closed.	Close the machine door.
Your machine does not discharge water.	Drain hose clogged or twisted.	Check the drain hose, then either clean or untwist.
	Pump filter clogged.	Clean the pump filter. (*)
	Laundry is too tighly packed together in the drum.	Spread your laundry in the machine evenly.
Your machine vibrates.	The feet have not been adjusted.	Adjust the feet. (**)
	Transit bolts fitted for transportation have not been removed.	Remove the transit bolts from the machine. (**)
	Small load in the drum.	This will not prevent operation of your machine.
	Your machine is overloaded with laundry or laundry is unevenly spread.	Do not overload the drum. Spread laundry evenly in the drum.
	Your machine rests on a hard surface.	Do not set up your Washing Machine on a hard surface.
Excessive foam is formed in the detergent drawer.	Excessive amount of detergent used.	Press the Start/Pause button. To stop the foam, dilute one tablespoon of softener into 1/2 litre of water and pour into the detergent drawer. Press the Start/Pause button after 5-10 mins.
	Wrong detergent used.	Only use detergents produced for automatic Washing Machines.
Unsatisfactory washing result.	Your washing is too dirty for the programme selected.	Use the information in the programme tables to select the most appropriate programme.
	Amount of detergent used insufficient.	Use the amount of detergent as instructed on the packaging.
	There is too much laundry in your machine.	Check that the maximum capacity for the selected programme has not been exceeded.

FAULT	POSSIBLE CAUSE	TROUBLESHOOTING
Unsatisfactory washing result.	Hard water.	Increase the amount of detergent following the manufacturer's instructions.
	Your laundry is too tightly packed together in the drum.	Check that your laundry is spread out.
As soon as the machine is loaded with water, water discharges.	The end of water drain hose is too low for the machine.	Check that the drain hose is at a suitable height. (**) .
No water appears in the drum during washing.	No fault. Water is in the unseen part of the drum.	. . . . .
Laundry has detergent residue.	Non-dissolving particles of some detergents may appear on your laundry as white spots.	Perform an extra rinse, or clean your laundry with a brush after it dries.
Grey spots appear on the laundry.	There is untreated oil, cream or ointment on your laundry.	Use the amount of detergent as instructed on the packaging in the next wash.
The spin cycle does not take place or takes place later than expected.	No fault. The Unbalanced load control system has been activated.	The Unbalanced load control system will try to spread your laundry. The spinning cycle will begin once your laundry is spread. Load the drum evenly for the next wash.

(*) See the chapter regarding maintenance and cleaning of your machine.

(**) See the chapter regarding installation of your machine.

10. AUTOMATIC FAULT WARNINGS AND WHAT TO DO

Your Washing Machine is equipped with a built-in fault detection system, indicated by a combination of flashing wash operation lights. The most common failure codes are shown below.

TROUBLE CODE	POSSIBLE FAULT	WHAT TO DO
E01	The door of your machine is not shut properly.	Shut the door properly until you hear a click. If your machine persists to indicate fault, turn off your machine, unplug it and contact the nearest authorised service agent immediately.
E02	The water pressure or the water level inside the machine may be low.	Check the tap is fully turned on. Mains water may be cut-off. If the problem still continues, your machine will stop after a while automatically. Unplug the machine, turn off your tap and contact the nearest authorised service agent.
E03	The pump is faulty or pump filter is clogged or electrical connection of the pump is faulty.	Clean the pump filter. If the problem persists, contact the nearest authorised service agent. (*)
E04	Your machine has excessive amount of water.	Your machine will discharge water by itself. Once the water has drained, turn off your machine and unplug it. Turn off the tap and contact the nearest authorised service agent.

(*) See the chapter regarding maintenance and cleaning of your machine.

11. DESCRIBING THE ENERGY LABEL AND SAVING ENERGY

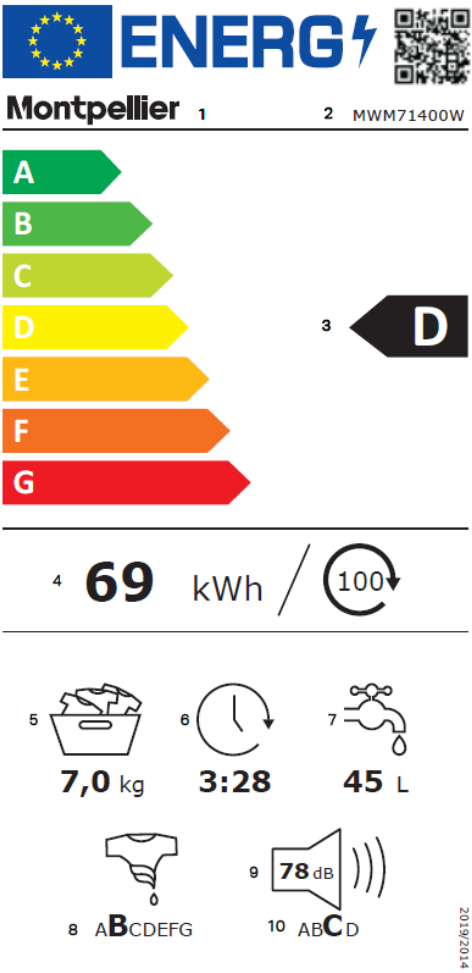

1. Brand
2. Model
3. Energy Class
4. Energy Consumption
5. Rated Capacity - Dry Laundry
6. Programme Duration
7. Water Consumption per Cycle
8. Spin-Drying Efficiency Class
9. Noise Value While Spinning
10. Airborne Acoustical Noise Emission Class

Results are based on using the Eco 40-60 programme.

Energy use and water consumption may vary based on water pressure, water hardness, water temperature, ambient temperature, amount of laundry, additional function selection and voltage fluctuations.

Energy consumption and water usage can be reduced by not exceeding the washing load specified in the programme tables.

Use programmes of shorter duration for lightly soiled laundry and daily washes. Carry out cleaning and maintenance at regular intervals.

Here For You

After-sales assistance

If you continue to experience problems with your appliance, please call the Montpellier customer service helpline on: **01759 487839**

Please have all your product details available, including the model number, serial number, original sales invoice (clearly showing model number,date of purchase and your retailer's details) before registering a fault.

The service call cannot progress without this information.

Your 2 year Manufacturer's guarantee

THIS DOES NOT AFFECT YOUR STATUTORY RIGHTS.

Your new Montpellier appliance carries a free guarantee which protects you against the cost of repairs during the first 24 months from date of purchase provided that:

Any claim is accompanied by evidence of the model reference, model serial number and proof of purchase, such as a Sales Receipt, showing that the appliance was purchased within the 24 months prior to the date of claim.

What is not covered under the Guarantee

- Any appliance not correctly installed and operated in accordance with the manufacturer's instructions
- Any appliance that is used for anything other than domestic purposes.
  Any defect caused by accident, misuse, unauthorised modification or inexpert repair.
- Cost of Call-out where a fault cannot be found with the appliance.
  Cost of Call-out for work covering routine maintenance, such as, but not exclusively, cleaning of filters or defrosting.
- Cost of Call-out for work required to correct the alignment of doors following door reversal procedures carried out by you.
  Use of the appliance by anyone other than the Householder.
  Use in any commercial environment.
- Consumable items, such as, but not exclusively, fuses in plugs, bulbs and breakable items which require routine replacement.
  Repair costs incurred that have not been authorised by Montpellier service and/or carried out by a non-approved Montpellier engineer.
- Montpellier Appliances do not accept claims for consequential loss, rusting, corroding, delivery damage or scratches.

YOUR GUARANTEE IS VALID ONLY IN THE UK & REPUBLIC OF IRELAND

To register your appliance simply complete the card in your appliance pack and return it with a stamp affixed or alternatively you can register online at **www,montpellier-appliances.com/support**

SERVICE HELP-LINE

Should your appliance develop a fault, please call the Montpellier customer service helpline on:

01759 487839

Please remember to have all your product details available, including the model number, serial number, date of purchase and your retailer's details before registering a fault.

10 years

The minimum period which must supply the spare parts for the household washing machine is 10 years.

Montpellier Domestic Appliances Ltd.
Unit 1, Tewkesbury Retail Park, Northway Lane,
Tewkesbury, Gloucestershire GL20 8JU

www.montpellier-appliances.com

The symbol on the product or on its packaging indicates that this product may not be treated as household waste. Instead it shall be handed over to the applicable collection point for the recycling of electrical and electronic equipment. By ensuring this product is disposed of correctly, you will help prevent potential negative consequences for the environment and human health, which could otherwise be caused by inappropriate waste handling of this product. For more detailed information about recycling of this product, please contact your local city office, your household waste disposal service or the shop where you purchased the product.

52432818